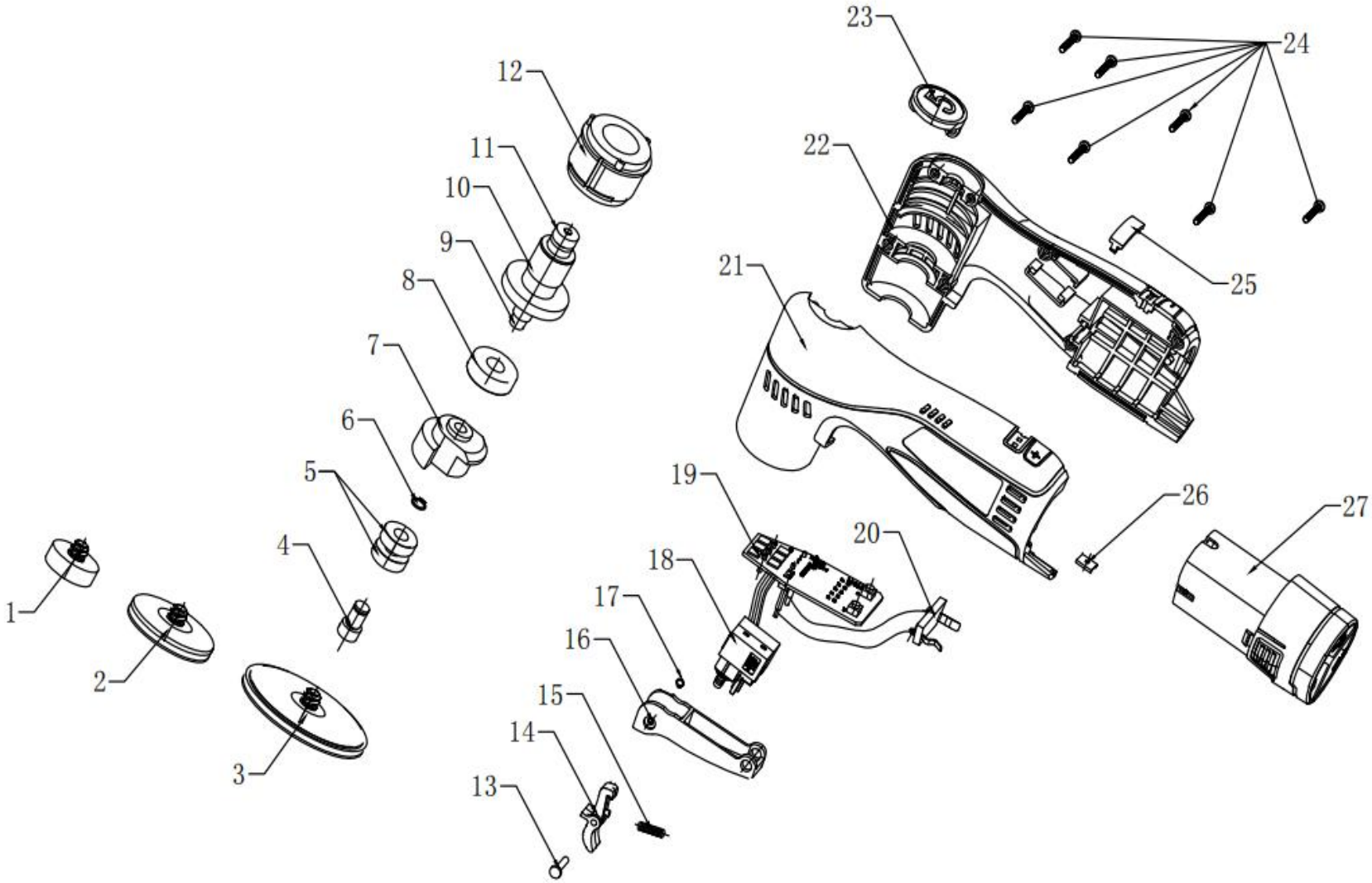
1
2
3
4
5
6
7
8
9
10
11
12
13
14
15
16
17
18
19
20
21
22
23
24
25
26
27

Drawing No.	Quantity	Name	Drawing No.	Quantity	Name
1	1	1.2-inch M6 Thick Backplate	15	1	SpringΦ0.5×Φ5×15mm
2	1	2-inch M6 Backplate	16	1	Power Switch
3	1	3-inch M6 Backplate	17	1	Φ3 Shaft Circlip
4	1	M6 Eccentric Shaft	18	1	Switch (JC18-5)
5	2	NSK 688ZZ Bearing	19	1	Controller (MINI 12V M5)
6	1	Φ8 Shaft Circlip	20	1	Electric Plug Pin (12V)
7	1	Eccentric Wheel (Special)	21	1	Housing (Left)
8	1	LFB 6000DDU Bearing	22	1	Housing (Right)
9	1	M5 Motor Shaft	23	1	Decorative Cover
10	1	Rotor	24	7	ST3×12 Screw
11	1	LFB 624 Bearing	25	1	Gear Position Light Guide Plate
12	1	Stator (3815#)	26	1	6mm Clip
13	1	Shaft PinΦ3×16mm	27	1	12V Lithium Battery
14	1	Switch Lock	28	1	Battery charge