Explosion diagram

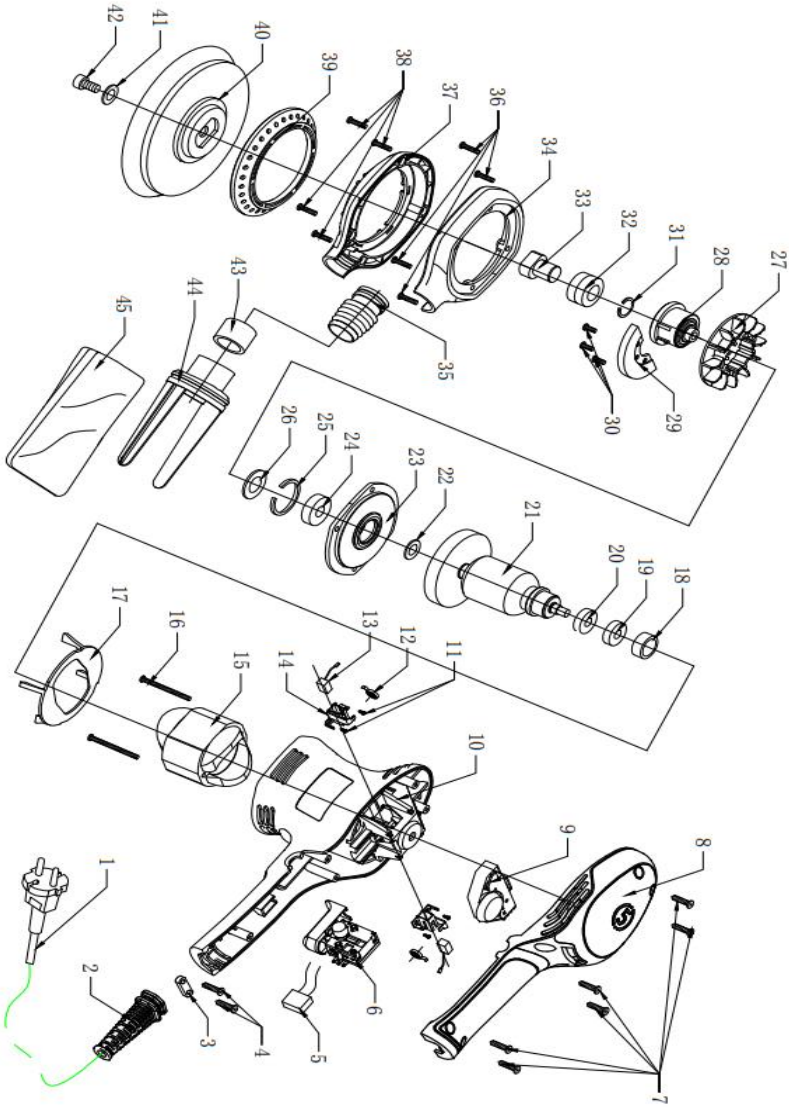

Partlist

Ref No.	QTY	DES.	Ref No.	QTY	DES.
1	1	Power Cord	24	1	LFB 6001-DDU Bearing
2	1	Power Cord Sleeve	25	1	Circlip Φ28
3	1	Wire Pressing Plate	26	1	gasketΦ17xΦ28x1
4	2	Screw-ST4X16	27	1	Plastc Fan
5	1	Capacitor 0.33uf MKP-X2	28	1	Eccentric Seat (Eccentric Wheel)
6	1	Switch	29	1	Eccentric Balance
7	6	Screw-ST4X14	30	1	Screw- M3X14
8	1	S1514 housing cover	31	1	CirclipΦ12mm
9	1	Speed controller5000-10000/min	32	2	LFB 6001bearing +6001VV bearing
10	1	S1514 housing	33	1	Eccentric Shaft
11	4	Screw-ST3X8	34	1	Lower Cover of Eccentric Shield
12	2	Coil spring	35	1	Dust Suction Pipe Joint
13	2	Carbon brushes	36	4	Screw-ST4X20
14	2	Carbon brush holder	37	1	Upper Cover of Eccentric Shield
15	1	Stator	38	4	Screw-ST4X14
16	1	Screw-ST4X50	39	1	Large Rubber Ring
17	1	Fan Shroud	40	1	Backing plate
18	1	Bearing sleeve	41	1	non-slip gasket
19	1	LFB 607-VV Bearing	42	1	Screw-5/16-24unf
20	1	8 - Grade Magnetic Ring	43	1	Rubber sleeve Φ38xΦ29x25
21	1	Rator	44	1	Plastic Bracket for Dust Collection Bag
22	1	GasketΦ12xΦ20x0.5	45	1	Dust Collection Cloth Bag
23	1	Aluminum Part - Bearing Seat			