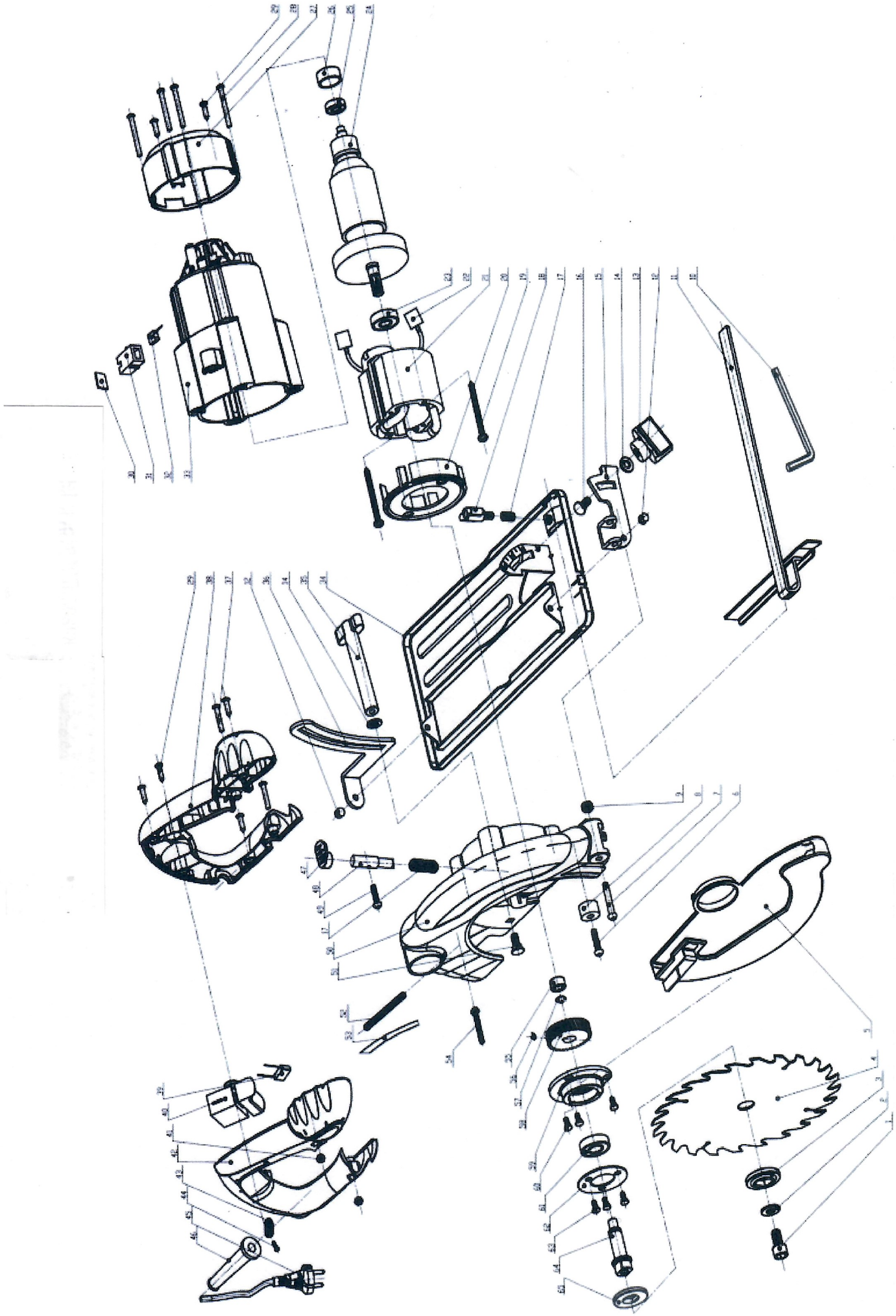

CP185		
No.	English Name	QTY
1	Hexangular screw	1
2	Flat washer	1
3	Outer Flange	1
4	Blade	1
5	Active cover	1
6	Flat head screw	1
7	Cross head screw	1
8	Rubber retainer ring	1
9	Lock nut	1
10	Hexangular spanner	1
11	Guide ruler	1
12	Semitubular rivet	2
13	Adjusting knob	1
14	Flat washer	2
15	Adjusting bracket	1
16	Screw	1
17	Spring	2
18	Screw	1
19	Tapping screw	2
20	Baffle plate	1
21	Stator	1
22	Carbon brush illustration	2
23	Bearing	1
24	Armature	1
25	Bearing	1
26	Bearing sleeve	1
27	Back cover	1
28	Cross head screw	4
29	Tapping screw	6
30	Carbon brush cap	2
31	Carbon brush holder	2
32	Carbon brush	2
33	Housing	1
34	Steel	1
35	lock lever	1
36	Adjusting bracket	1
37	Cross head screw	2
38	Left handle	1
39	Capacitor	1
40	Switch	1
41	Nut	2
42	Right handle	1

43	Strain Relief	1
44	Tapping screw	2
45	Cord	1
46	Cord guard	1
47	Spindle lock cap	1
48	Spindle lock pin	1
49	Cross head screw	1
50	Gear box	1
51	Screw	1
52	Spring	1
53	Label	1
54	Cross head screw	1
55	Steel sleeve	1
56	Woodruff key	1
57	Jump ring	1
58	Gear	1
59	Front cover	1
60	Flat head screw	3
61	Bearing	1
62	Active cover flange	1
63	Flat head screw	3
64	Spindle	1
65	Inside flange	1